Specifications

Engine

Model	YANMAR 4TN107TT
Type	Direct injection, water-cooled, 4-cycle diesel engine with turbocharger, intercooler,Tier 3 certified
No. of cylinders	4
Bore and stroke	107 mm × 127 mm
Displacement	4.567 L
Rated power output	122 kW /2,000 min^{-1} (ISO 9249 : with fan)
	127 kW /2,000 min^{-1} (ISO 14396 : without fan)
Max. torque	791 N·m /1,500 min^{-1} (ISO 9249 : with fan)
	805 N·m/1,500 min^{-1} (ISO 14396 : without fan)

Hydraulic system

Pump		
Type		Two variable displacement axial piston pumps + extra gear pump + pilot gear pump
Max. discharge flow		2 × 220 L/min, 1 × 40.6 L/min , 1 × 20 L/min
Relief valve setting		
Boom, arm and bucket		34.3 MPa {350 kgf/cm^2}
Power Boost		37.8 MPa {385 kgf/cm^2}
Travel circuit		34.3 MPa {350 kgf/cm^2}
Swing circuit	SK225SR/SK230SRLC	29.0 MPa {296 kgf/cm^2}
	SK235SR/SK270SRLC	28.4 MPa {290 kgf/cm^2}
Control circuit		5.0 MPa {50 kgf/cm^2}
Pilot control pump		Gear type
Main control valve		8-spool
Oil cooler		Air cooled type

Swing system

Model	SK225SR/SK230SRLC	SK235SR/SK270SRLC
Swing motor	One fixed displacement piston motor	
Parking brake	Wet multiple plate	
Swing speed	12.6 min^{-1}	10.2 min^{-1}
Swing torque	73.0 kN·m	87.7 kN·m

Travel system

Model	SK225SR/SK230SRLC	SK235SR/SK270SRLC
Travel motors	2 × axial-piston, two-step motors	
Parking brakes	Wet multiple plate	
Travel shoes	46 each side (for SK225SR) 49 each side (for SK230SRLC)	47 each side (for SK235SR) 51 each side (for SK270SRLC)
Travel speed	5.8 / 3.5 km/h	5.2 / 3.2 km/h
Drawbar pulling force	227 kN (SAE)	244 kN (SAE)
Gradeabillty	70% {35°}	

Cab & control

Cab
All-weather, sound-suppressed steel cab mounted on the high suspension mounts filled with silicone oil and equipped with a heavy, insulated floor mat.
Control
Two hand levers and two foot pedals for travel
Two hand levers for excavating and swing
Electric rotary-type engine throttle

Boom, arm & bucket

bore × stroke

Model	SK225SR/SK230SRLC	SK235SR/SK270SRLC
Boom cylinders	120 mm × 1,355 mm	125 mm × 1,320 mm
Arm cylinder	130 mm × 1,406 mm	135 mm × 1,558 mm
Bucket cylinder	110 mm × 1,064 mm	120 mm × 1,080 mm

Dozer blade (Optional)

bore × stroke

Model	SK225SR	SK235SR
Dozer cylinder	140 mm × 200 mm	

Refilling capacities & lubrications

Model	SK225SR/SK230SRLC	SK235SR/SK270SRLC
Fuel tank	330 L	
Cooling system	23.0 L	
Engine oil	23.1 L	
Travel reduction gear	2 × 4.5 L	
Swing reduction gear	2.7 L	5.0 L
Hydraulic oil tank	114 L tank oil level	
	230 L hydraulic system	

Attachments

Backhoe bucket and combination

Use			Backhoe bucket			
			Normal digging			
Bucket capacity	ISO Heaped	m^3	0.51	0.7	0.8	0.93
	Struck	m^3	0.39	0.52	0.59	0.67
Opening width	With side cutters	mm	870	1,080	1,160	1,330
	Without side cutters	mm	770	980	1,060	1,230
No. of bucket teeth			3	5	5	5
Bucket weight		kg	520	630	660	710
Combinations	SK225SR/SK230SRLC 2.87 m standard arm		○	○	◎	△
	SK235SR/SK270SRLC 2.94 m standard arm		○	○	◎	△

◎ Standard ○ Recommended △ Loading only

Working ranges

Unit: mm

Model	SK225SR/SK230SRLC	SK235SR/SK270SRLC
Boom	5.62 m	5.65 m
Arm / Range	Standard 2.87 m	Standard 2.94 m
a- Max. digging reach	9,700	9,850
b- Max. digging reach at ground level	9,530	9,680
c- Max. digging depth	6,580	6,650
d- Max. digging height	10,580	11,210
e- Max. dumping clearance	7,710	8,330
f- Min. dumping clearance	2,980	3,140
g- Max. vertical wall digging depth	5,950	6,060
h- Min. swing radius	2,370	1,960
i- Horizontal digging stroke at ground level	5,030	5,270
j- Digging depth for 2.4 m (8') flat bottom	6,370	6,470
Bucket capacity ISO heaped m^3	0.80	0.80

Digging Force (ISO 6015)

Unit: kN

Model	SK225SR/SK230SRLC	SK235SR/SK270SRLC
Arm length	Standard 2.87 m	Standard 2.94 m
Bucket digging force	120 132*	143 157*
Arm crowding force	88.0 96.8*	102 112*

*Power Boost engaged.

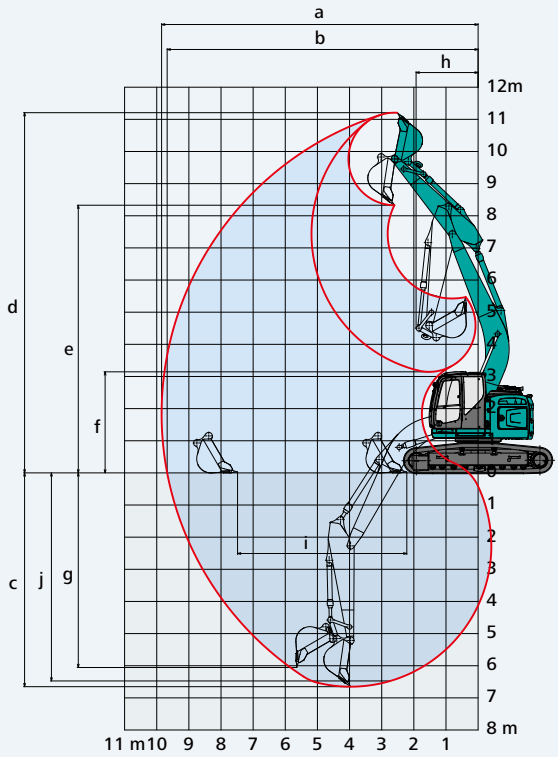

Dimensions

Unit: mm

Model		SK225SR	SK230SRLC	SK235SR	SK270SRLC
Boom		5.62 m		5.65 m	
Arm length		Standard 2.87 m		Standard 2.94 m	
A	Overall length	8,690	8,830	8,780	8,970
A'	Overall length (with dozer blade)	9,670	—	9,730	—
B	Overall height (to top of boom)	3090		3,060	
C	Overall width	2,800	2,990	2,990	3,190
D	Overall height (to top of cab)	3,150		3,180	
E	Ground clearance of rear end*	1,030		1,050	
F	Ground clearance*	425		440	

G	Tail swing radius {additional counterweight}	1,680 {1,850**}		1,720 {1,880**}	
G'	Distance from centre of swing to rear end {additional counterweight}	1,680 {1,850**}		1,720 {1,880**}	
H	Tumbler distance	3,370	3,660	3,470	3,850
I	Overall length of crawler	4,170	4,450	4,260	4,640
J	Track gauge	2,200	2,390	2,390	2,590
K	Shoe width	600			
L	Overall width of upper structure	2,990			
M	Dozer blade (up/down)	540/370	—	555/355	—

*Without including height of shoe lug
**Standard counterweight + additional counterweight 1,400 kg

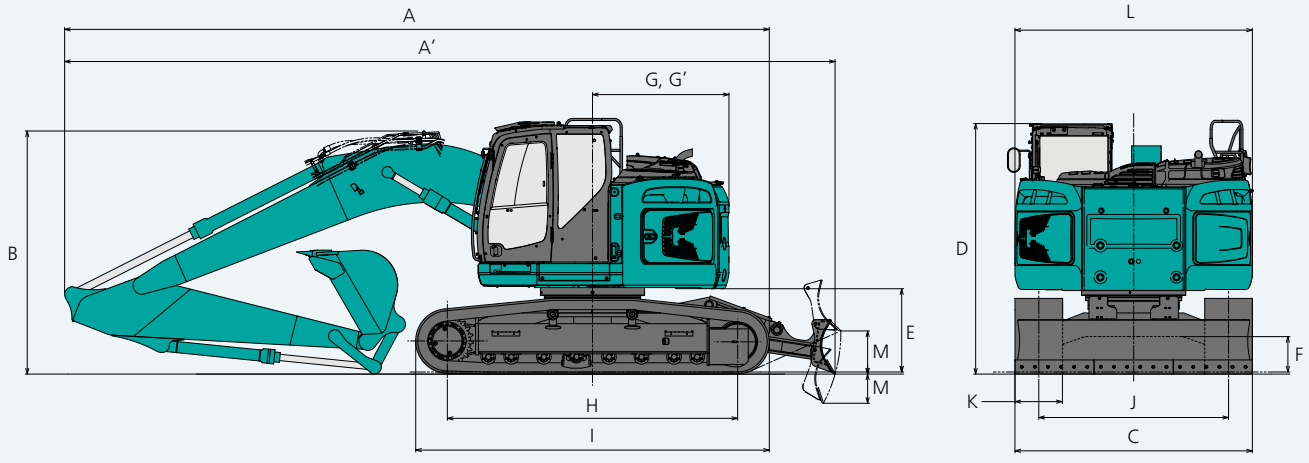

Operating weight & ground pressure

SK225SR/SK230SRLC

In standard trim, with standard boom, 2.87 m arm, and 0.8 m³ ISO heaped bucket, standard counterweight

Shaped			Triple grouser shoe			
Shoe width		mm	600	600 with DZ	700	790
Overall width of crawler	SK225SR	mm	2,800	2,800	2,900	2,990
	SK230SRLC	mm	2,990	—	3,090	3,180
Ground pressure	SK225SR	kPa	52.2	55.5	45.5	40.7
	SK230SRLC	kPa	49.0	—	42.9	38.3
Operation weight	SK225SR	kg	23,300	24,800	23,700	23,900
	SK230SRLC	kg	23,600	—	24,100	24,300

In standard trim, with standard boom, 2.87 m arm, and 0.8 m³ ISO heaped bucket, standard counterweight + additional counterweight 1,400 kg

Shaped			Triple grouser shoe			
Shoe width		mm	600	600 with DZ	700	790
Overall width of crawler	SK225SR	mm	2,800	2,800	2,900	2,990
	SK230SRLC	mm	2,990	—	3,090	3,180
Ground pressure	SK225SR	kPa	55.3	58.7	48.2	43.0
	SK230SRLC	kPa	51.9	—	45.4	40.5
Operation weight	SK225SR	kg	24,700	26,200	25,100	25,300
	SK230SRLC	kg	25,000	—	25,500	25,700

SK235SR/SK270SRLC

In standard trim, with standard boom, 2.94 m arm, and 0.8 m³ ISO heaped bucket, standard counterweight

Shaped			Triple grouser shoe			
Shoe width		mm	600	600 with DZ	700	800
Overall width of crawler	SK235SR	mm	2,990	2,990	3,090	3,190
	SK270SRLC	mm	3,190	—	3,290	3,390
Ground pressure	SK235SR	kPa	54.6	57.8	47.1	41.7
	SK270SRLC	kPa	50.5	—	43.8	38.8
Operation weight	SK235SR	kg	25,000	26,500	25,200	25,500
	SK270SRLC	kg	25,500	—	25,800	26,100

In standard trim, with standard boom, 2.94 m arm, and 0.8 m³ ISO heaped bucket, standard counterweight + additional counterweight 1,400 kg

Shaped			Triple grouser shoe			
Shoe width		mm	600	600 with DZ	700	800
Overall width of crawler	SK235SR	mm	2,990	2,990	3,090	3,190
	SK270SRLC	mm	3,190	—	3,290	3,390
Ground pressure	SK235SR	kPa	57.6	60.9	49.8	44.0
	SK270SRLC	kPa	53.3	—	46.2	40.9
Operation weight	SK235SR	kg	26,400	27,900	26,600	26,900
	SK270SRLC	kg	26,900	—	27,200	27,500

Lift capacities

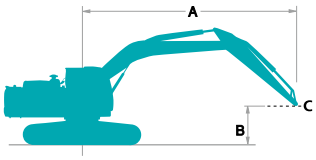

Rating over front

Rating over side or 360 degrees

A - Reach from swing centerline to arm top
B - Arm top height above/below ground
C - Lift point
Relief valve setting: 37.8 MPa (385 kgf/cm²)

SK225SR	Boom: 5.62 m Arm: 2.87 m Bucket: without Counterweight: 5,910 kg Shoe: 600 mm (Heavy Lift)												
A / B	1.5 m		3.0 m		4.5 m		6.0 m		7.5 m		At max. reach		Radius
9.0 m	kg											*3,920	*3,920	3.99 m
7.5 m	kg					*5,310	*5,310					*3,200	*3,200	5.97 m
6.0 m	kg					*5,790	*5,790	*5,330	4,390			*2,980	*2,980	7.11 m
4.5 m	kg			*9,230	*9,230	*7,750	6,640	*6,550	4,230	*4,250	2,940	*2,940	2,730	7.81 m
3.0 m	kg					*9,380	6,090	6,350	3,990	4,490	2,840	*3,030	2,460	8.18 m
1.5 m	kg					9,490	5,590	6,080	3,750	4,360	2,720	*3,250	2,360	8.25 m
G.L.	kg			*6,420	*6,420	9,170	5,320	5,890	3,580	4,270	2,640	*3,650	2,390	8.05 m
–1.5 m	kg	*6,660	*6,660	*10,550	9,960	9,090	5,250	5,820	3,520	4,250	2,620	4,220	2,600	7.55 m
–3.0 m	kg	*10,920	*10,920	*12,200	10,160	*9,140	5,320	5,870	3,570			5,070	3,120	6.67 m
–4.5 m	kg			*8,120	*8,120	*6,170	5,560					*4,950	4,510	5.24 m

SK225SR	Boom: 5.62 m Arm: 2.87 m Bucket: without Counterweight: 5,910 kg Shoe: 600 mm Dozer: blade up (Heavy Lift)												
A / B	1.5 m		3.0 m		4.5 m		6.0 m		7.5 m		At max. reach		Radius
9.0 m	kg											*3,920	*3,920	3.99 m
7.5 m	kg					*5,310	*5,310					*3,200	*3,200	5.97 m
6.0 m	kg					*5,790	*5,790	*5,330	4,680			*2,980	*2,980	7.11 m
4.5 m	kg			*9,230	*9,230	*7,750	7,060	*6,550	4,520	*4,250	3,150	*2,940	2,940	7.81 m
3.0 m	kg					*9,380	6,500	6,450	4,270	4,570	3,050	*3,030	2,660	8.18 m
1.5 m	kg					9,660	6,000	6,190	4,040	4,440	2,940	*3,250	2,550	8.25 m
G.L.	kg			*6,420	*6,420	9,340	5,730	6,000	3,870	4,350	2,860	*3,650	2,590	8.05 m
–1.5 m	kg	*6,660	*6,660	*10,550	*10,550	9,260	5,660	5,930	3,800	4,330	2,840	4,290	2,820	7.55 m
–3.0 m	kg	*10,920	*10,920	*12,200	10,920	*9,140	5,730	5,980	3,850			5,160	3,370	6.67 m
–4.5 m	kg			*8,120	*8,120	*6,170	5,970					*4,950	4,850	5.24 m

SK225SR	Boom: 5.62 m Arm: 2.87 m Bucket: without Counterweight: 5,910 kg + 1,400 kg Shoe: 600 mm Dozer: blade up (Heavy Lift)												
A / B	1.5 m		3.0 m		4.5 m		6.0 m		7.5 m		At max. reach		Radius
9.0 m	kg											*3,920	*3,920	3.99 m
7.5 m	kg					*5,310	*5,310					*3,200	*3,200	5.97 m
6.0 m	kg					*5,790	*5,790	*5,330	5,310			*2,980	*2,980	7.11 m
4.5 m	kg			*9,230	*9,230	*7,750	*7,750	*6,550	5,150	*4,250	3,640	*2,940	*2,940	7.81 m
3.0 m	kg					*9,380	7,420	*7,260	4,910	5,180	3,540	*3,030	*3,030	8.18 m
1.5 m	kg					*10,720	6,930	7,020	4,670	5,060	3,420	*3,250	2,980	8.25 m
G.L.	kg			*6,420	*6,420	10,620	6,660	6,830	4,500	4,970	3,340	*3,650	3,040	8.05 m
–1.5 m	kg	*6,660	*6,660	*10,550	*10,550	10,530	6,590	6,760	4,440	*4,940	3,330	*4,390	3,300	7.55 m
–3.0 m	kg	*10,920	*10,920	*12,200	*12,200	*9,140	6,660	*6,770	4,490			*5,700	3,920	6.67 m
–4.5 m	kg			*8,120	*8,120	*6,170	*6,170					*4,950	*4,950	5.24 m

SK230SRLC	Boom: 5.62 m Arm: 2.87 m Bucket: without Counterweight: 5,910 kg Shoe: 600 mm (Heavy Lift)												
A / B	1.5 m		3.0 m		4.5 m		6.0 m		7.5 m		At max. reach		Radius
9.0 m	kg											*3,920	*3,920	3.99m
7.5 m	kg					*5,310	*5,310					*3,200	*3,200	5.97m
6.0 m	kg					*5,790	*5,790	*5,330	4,900			*2,980	*2,980	7.11m
4.5 m	kg			*9,230	*9,230	*7,750	7,450	*6,550	4,730	*4,250	3,300	*2,940	*2,940	7.81m
3.0 m	kg					*9,380	6,880	7,240	4,490	5,100	3,200	*3,030	2,780	8.18m
1.5 m	kg					*10,720	6,370	6,970	4,250	4,970	3,080	*3,250	2,670	8.25m
G.L.	kg			*6,420	*6,420	10,730	6,090	6,780	4,080	4,880	3,000	*3,650	2,720	8.05m
–1.5 m	kg	*6,660	*6,660	*10,550	*10,550	*10,600	6,020	6,700	4,010	4,860	2,980	*4,390	2,960	7.55m
–3.0 m	kg	*10,920	*10,920	*12,200	11,870	*9,140	6,090	6,750	4,060			*5,700	3,540	6.67m
–4.5 m	kg			*8,120	*8,120	*6,170	*6,170					*4,950	*4,950	5.24m

SK235SR	Boom: 5.65 m Arm: 2.94 m Bucket: without Counterweight: 5,910 kg Shoe: 600 mm (Heavy Lift)												
A / B	1.5 m		3.0 m		4.5 m		6.0 m		7.5 m		At max. reach		Radius
9.0 m	kg											*5,200	*5,200	4.35 m
7.5 m	kg					*6,730	*6,730	*5,120	5,070			*4,270	*4,270	6.20 m
6.0 m	kg					*7,000	*7,000	*6,350	5,070			*3,950	3,570	7.30 m
4.5 m	kg			*10,100	*10,100	*8,130	7,730	*6,790	4,880	5,010	3,370	*3,870	3,010	7.97 m
3.0 m	kg			*11,240	*11,240	*9,660	7,080	6,940	4,590	4,880	3,250	*3,940	2,720	8.32 m
1.5 m	kg					10,430	6,490	6,630	4,310	4,730	3,110	3,980	2,610	8.40 m
G.L.	kg			*6,640	*6,640	10,050	6,160	6,410	4,110	4,620	3,010	4,070	2,660	8.19 m
–1.5 m	kg	*6,750	*6,750	*11,340	*11,340	9,940	6,070	6,320	4,030	4,600	2,990	4,440	2,890	7.70 m
–3.0 m	kg	*11,820	*11,820	*11,260	*11,260	*8,610	6,150	6,370	4,080			*5,030	3,450	6.84 m
–4.5 m	kg			*7,040	*7,040	*5,500	*5,500					*3,990	*3,990	5.45 m

SK235SR	Boom: 5.65 m Arm: 2.94 m Bucket: without Counterweight: 5,910 kg Shoe: 600 mm Dozer: blade up (Heavy Lift)												
A / B	1.5 m		3.0 m		4.5 m		6.0 m		7.5 m		At max. reach		Radius
9.0 m	kg											*5,200	*5,200	4.35 m
7.5 m	kg					*6,730	*6,730	*5,120	*5,120			*4,270	*4,270	6.20 m
6.0 m	kg					*7,000	*7,000	*6,350	5,390			*3,950	3,820	7.30 m
4.5 m	kg			*10,100	*10,100	*8,130	*8,130	*6,790	5,190	5,090	3,610	*3,870	3,230	7.97 m
3.0 m	kg			*11,240	*11,240	*9,660	7,540	7,050	4,910	4,960	3,490	*3,940	2,940	8.32 m
1.5 m	kg					10,600	6,950	6,740	4,630	4,810	3,350	4,050	2,820	8.40 m
G.L.	kg			*6,640	*6,640	10,220	6,630	6,520	4,430	4,700	3,250	4,140	2,870	8.19 m
–1.5 m	kg	*6,750	*6,750	*11,340	*11,340	10,110	6,540	6,430	4,350	4,680	3,230	4,520	3,120	7.70 m
–3.0 m	kg	*11,820	*11,820	*11,260	*11,260	*8,610	6,610	*6,390	4,390			*5,030	3,720	6.84 m
–4.5 m	kg			*7,040	*7,040	*5,500	*5,500					*3,990	*3,990	5.45 m

SK235SR	Boom: 5.65 m Arm: 2.94 m Bucket: without Counterweight: 5,910 kg + 1,400 kg Shoe: 600 mm Dozer: blade up (Heavy Lift)												
A / B	1.5 m		3.0 m		4.5 m		6.0 m		7.5 m		At max. reach		Radius
9.0 m	kg											*5,200	*5,200	4.35 m
7.5 m	kg					*6,730	*6,730	*5,120	*5,120			*4,270	*4,270	6.20 m
6.0 m	kg					*7,000	*7,000	*6,350	6,060			*3,950	*3,950	7.30 m
4.5 m	kg			*10,100	*10,100	*8,130	*8,130	*6,790	5,870	5,730	4,120	*3,870	3,710	7.97 m
3.0 m	kg			*11,240	*11,240	*9,660	8,530	*7,440	5,580	5,600	4,000	*3,940	3,390	8.32 m
1.5 m	kg					*10,820	7,940	7,600	5,300	5,450	3,860	*4,170	3,270	8.40 m
G.L.	kg			*6,640	*6,640	*11,020	7,620	7,380	5,100	5,340	3,760	*4,610	3,340	8.19 m
–1.5 m	kg	*6,750	*6,750	*11,340	*11,340	*10,280	7,520	7,290	5,020	5,310	3,740	5,130	3,620	7.70 m
–3.0 m	kg	*11,820	*11,820	*11,260	*11,260	*8,610	7,600	*6,390	5,070			*5,030	4,290	6.84 m
–4.5 m	kg			*7,040	*7,040	*5,500	*5,500					*3,990	*3,990	5.45 m

SK270SRLC	Boom: 5.65 m Arm: 2.94 m Bucket: without Counterweight: 5,910 kg Shoe: 600 mm (Heavy Lift)												
A / B	1.5 m		3.0 m		4.5 m		6.0 m		7.5 m		At max. reach		Radius
9.0 m	kg											*5,200	*5,200	4.35 m
7.5 m	kg					*6,730	*6,730	*5,120	*5,120			*4,270	*4,270	6.20 m
6.0 m	kg					*7,000	*7,000	*6,350	5,710			*3,950	*3,950	7.30 m
4.5 m	kg			*10,100	*10,100	*8,130	*8,130	*6,790	5,510	5,930	3,820	*3,870	3,420	7.97 m
3.0 m	kg			*11,240	*11,240	*9,660	8,080	*7,440	5,210	5,790	3,690	*3,940	3,110	8.32 m
1.5 m	kg					*10,820	7,470	7,960	4,930	5,640	3,560	*4,170	3,000	8.40 m
G.L.	kg			*6,640	*6,640	*11,020	7,140	7,730	4,720	5,530	3,450	*4,610	3,050	8.19 m
–1.5 m	kg	*6,750	*6,750	*11,340	*11,340	*10,280	7,040	7,640	4,640	5,500	3,430	5,310	3,320	7.70 m
–3.0 m	kg	*11,820	*11,820	*11,260	*11,260	*8,610	7,120	*6,390	4,690			*5,030	3,950	6.84 m
–4.5 m	kg			*7,040	*7,040	*5,500	*5,500					*3,990	*3,990	5.45 m

Note:

1. Do not attempt to lift or hold any load that is greater than these lift capacities at their specified lift point radius and heights. Weight of all accessories must be deducted from the above lift capacities.
2. Lift capacities are based on machine standing on level, firm, and uniform ground. User must make allowance for job conditions such as soft or uneven ground, out of level conditions, side loads, sudden stopping of loads, hazardous conditions, experience of personnel, etc.
3. Bucket pin attachment point defined as lift point.
4. The above lift capacities are in compliance with ISO 10567. They do not exceed 87% of hydraulic lift capacity or 75% of tipping load. Lift capacities marked with an asterisk(*) are limited by hydraulic capacity rather than tipping load.
5. Operator should be fully acquainted with the Operator's and Maintenance Instructions before operating this machine. Rules for safe operation of equipment should be adhered to at all times.
6. Lift capacities apply to only machine as originally manufactured and normally equipped by KOBELCO CONSTRUCTION MACHINERY CO., LTD.

Standard and Optional Equipment

●=Std ○=Opt —= N/A

Category	Description	SK225SR-7	SK230SRLC-7	SK235SR-7	SK270SRLC-7
Engine	YANMAR 4TN107TT (Tier3 certified)	●	●	●	●
	Alternator 24 V / 80 A	●	●	●	●
	Starter motor 24 V / 5 kW	●	●	●	●
	Batteries 2 x 12 V (105 Ah)	●	●	●	●
	Fan suction type cooling system	●	●	●	●
	iNDr system	●	●	●	●
	Auto deceleration function	●	●	●	●
	Auto idle stop	●	●	●	●
Hydraulic system	3 work modes H, S, Eco	●	●	●	●
	Power boost (37.8 MPa {385 kgf/cm²})	●	●	●	●
	Heavy lift mode	●	●	●	●
	Pressure release function	●	●	●	●
	Independent travel function	●	●	●	●
	Auto warm up system	●	●	●	●
	Proportional Hand Control (for E&N&B piping)	●	●	●	●
	Hydraulic oil VG46	●	●	●	●
Piping	E & N&B piping	●	●	●	●
	QH piping	●	●	●	●
Cabin	Air suspension seat with heating	●	●	●	●
	10 inch colour monitor	●	●	●	●
	LED door light	●	●	●	●
	Air-conditioner	●	●	●	●
	Radio (FM/AM & AUX & USB & Bluetooth® & hands free telephone)	●	●	●	●
	Harness for cab four lights and cab yellow flasher	●	●	●	●
	Intermittent windshield wiper	●	●	●	●
	12 V power outlet	●	●	●	●
	Rain visor	○	○	○	○
Lights	LED work lights ; 2 on boom, 1 on upper frame, 2 on rear counterweight	●	●	●	●
	LED work lights ; 2 on cab top front	○	○	○	○
Working equipment	Standard boom (5.62 m)	●	●	–	–
	Standard boom (5.65 m)	–	–	●	●
	Standard arm (2.87 m)	●	●	–	–
	Standard HD arm (2.94 m) with rock guard	–	–	●	●
Counter weight	Standard C/W (5,910 kg)	●	●	●	●
	Standard C/W (5,910 kg) + Additional C/W (1,400 kg)	○	○	○	○
Undercarriage	600 mm steel shoe	●	●	●	●
	700 mm steel shoe	○	○	○	○
	790 mm steel shoe	○	○	–	–
	800 mm steel shoe	–	–	○	○
	Track guide (one per side)	●	●	●	●
	Additional track guides (two additional per side)	○	○	○	○
	Lower frame guard	●	●	●	●
	Dozer blade (2,800 mm) for 600 mm shoe	○	–	–	–
	Dozer blade (2,990 mm) for 600 mm shoe	–	–	○	–
Safety	Engine emergency stop switch	●	●	●	●
	Pump emergency mode (KPSS release switch)	●	●	●	●
	Emergency accel dial	●	●	●	●
	Emergency manual valve for lowering attachment	●	●	●	●
	Safety valve for boom & arm cylinder	●	●	●	●
	ROPS compliant cab (ISO 12117-2:2008)	●	●	●	●
	OPG Level II top guard (ISO 10262;1998)	●	●	●	●
	OPG Level II front guard (ISO 10262;1998)	○	○	○	○
	Eagle-eye view camera (Rear, Right, Left)	●	●	●	●
	Seatbelt indicator on display	●	●	●	●
	Travel alarm	●	●	●	●
Others	Refueling pump	○	○	○	○
	Harness for engine room light	●	●	●	●
	RAL color	○	○	○	○
	GEOSCAN	●	●	●	●

Note: Bluetooth® is a registered trademark of the Bluetooth SIG Inc.

Note: This catalogue may contain attachments and optional equipment that are not available in your area. And it may contain photographs of machines with specifications that differ from those of machines sold in your areas. Please consult your nearest KOBELCO distributor for those items you require.
Specialist equipment is needed to use this machine in demolition work. Before using it please contact your KOBELCO dealer.
Due to our policy of continuous product improvements all designs and specifications are subject to change without advance notice.
Copyright by KOBELCO CONSTRUCTION MACHINERY CO., LTD. No part of this catalogue may be reproduced in any manner without notice.

KOBELCO CONSTRUCTION MACHINERY CO., LTD.
5-15, Kitashinagawa 5-chome, Shinagawa-ku, Tokyo 141-8626 JAPAN
Tel: +81 (0) 3-5789-2146 Fax: +81 (0) 3-5789-2135
www.kobelcocm-global.com

Enquiries To: